Beam Data Process: Primary/Secondary Beam Monitor Data Readout

Brett Viren

Brookhaven National Lab

bv@bnl.gov

1/5 – The 5th Data Stream - the Beam Data Process

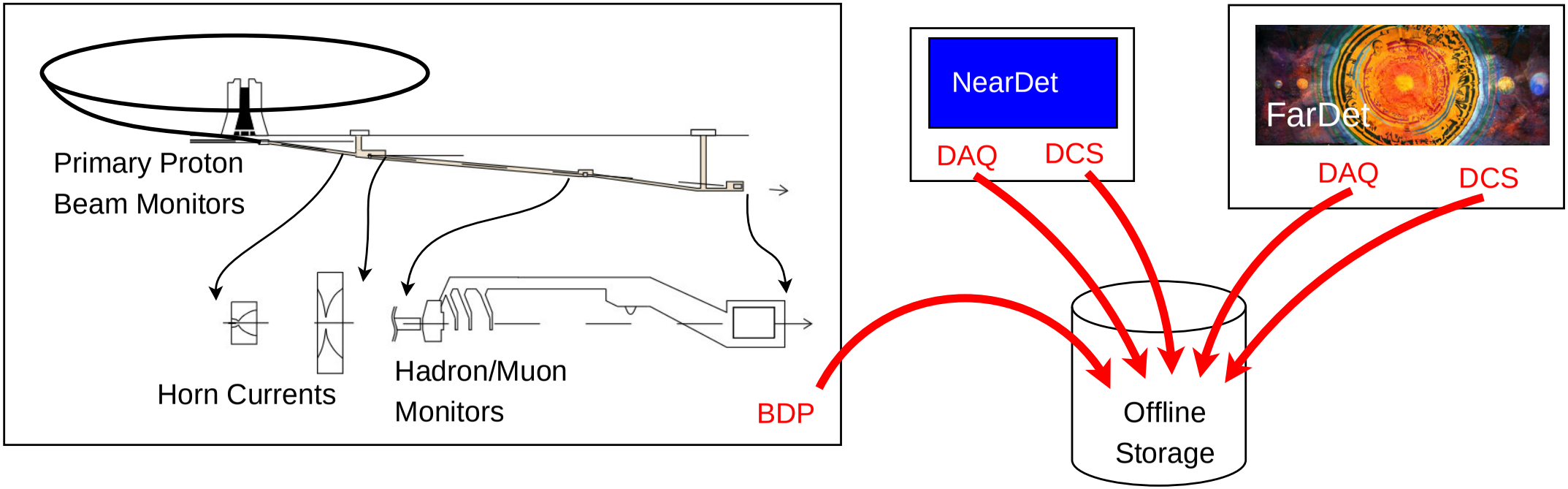

Beam monitor devices read out through "ACNET":

- Beam spill time stamps
- BPMs, beam intensities, losses, magnet currents
- Horn and baffle monitors, Hadron/Muon monitor readout
- Read out once or twice per spill or less frequently

2/5 – Data flow from ACNET to MINOS Offline

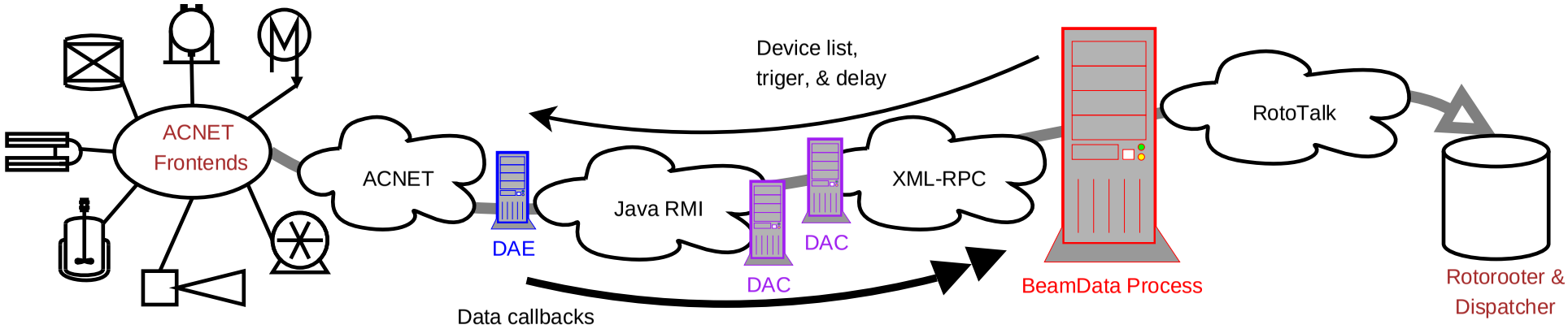

Over simplified readout description:

1. BDP configure with sets of:
   - A trigger event + delay
   - A list of ACNET devices
2. A "Data Acquisition Client" proxies these to the "Data Acquisition Engine" which speaks ACNET
3. When trigger event + delay elapses, DAE reads out ACNET devices and pushes data back to DAC which pushes to our BDP
4. BDP pushes data to the Rotorooter which creates the input ROOT files going to the Dispatcher and finally to offline storage

3/5 – Offline RawData Interface Exists

- It exists, mostly finalized
- Hides complexity of ACNET quirks and complex devices

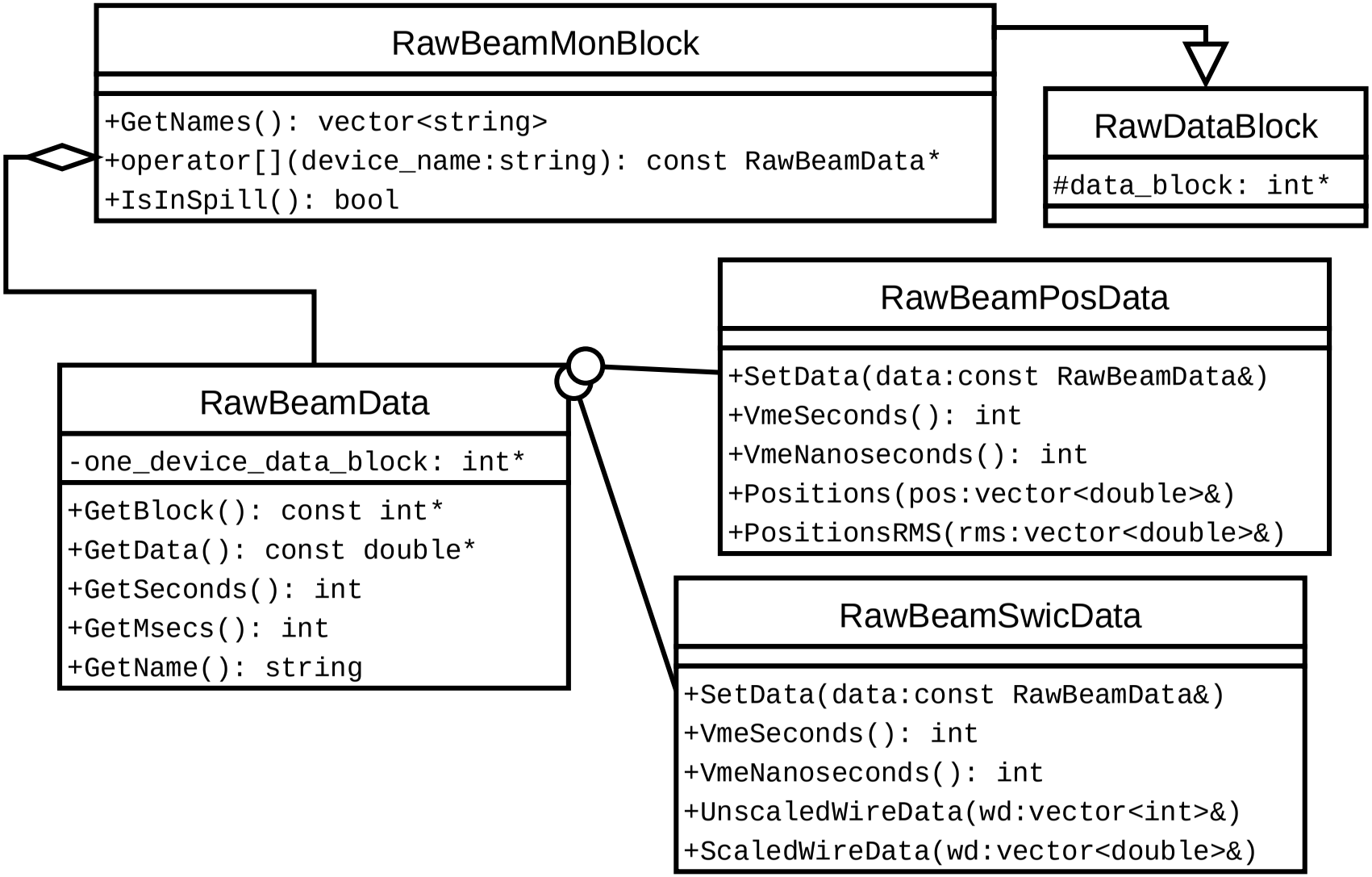

4/5 – Timestamp Test using SWIC Scanner (hadron/muon DAQ)

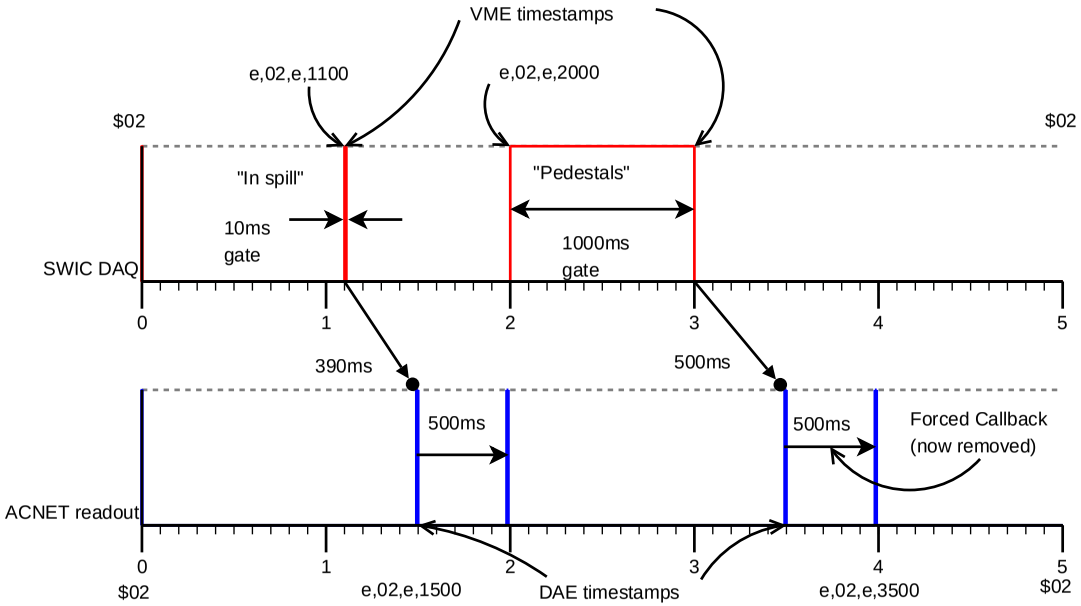

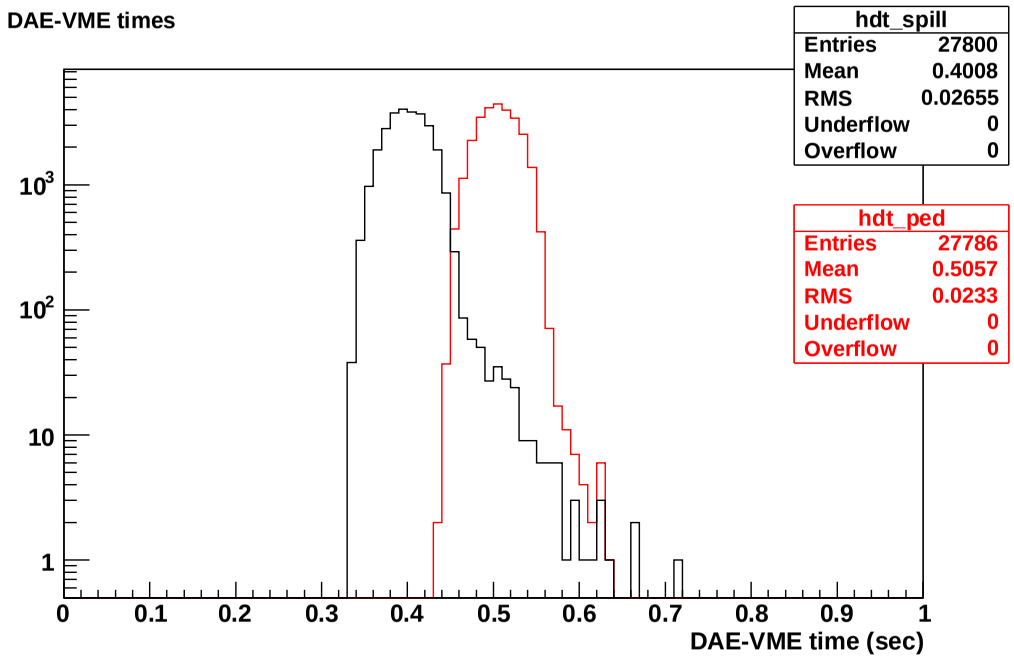

- 5 second period hardware and readout trigger, 2 readouts per period
- VME hardware timestamp ~10μsec
- Expect 390 and 500 msec latency, see 400 and 506 msec mean latency
- Mean jitter ~25 msec, worst case ~400 msec

$\longrightarrow$Tests done 9/1 (before shutdown), need fully busy ACNET to be sure, but so far spill-by-spill correlation with NearDet looks doable.

5/5 – Near future plans.

- Move process home from minos-om to dcsdcp-nd computer
- Shift readiness: code clean up, GUI with process monitoring, crash and out-of-spec alarms (2nd half Oct)
- Set up Dispatcher/Enstore connection
- Evaluating packages for prompt data displays
  1. Java Analysis Studio (JAS)
  2. VMS based "console" applications
  3. Custom coded from scratch